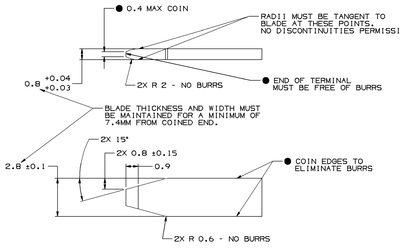

● THESE DIMENSIONS ARE CRITICAL TO THE MECHANICAL AND ELECTRICAL PERFORMANCE OF THE CONNECTION SYSTEM.

MATERIAL SPECIFICATIONS

RECOMMENDED

BASE METAL - CDA-210, EXTRA SPRING TEMPER

- TIN PLATING (WHERE APPLICABLE TO 125°C MAX CONTINUOUS USAGE): 0.0050±0.0025 MM (200±100 µIN) ELECTROPLATED TIN.
- USAGE OF PLATING TYPES OTHER THAN RECOMMENDED MUST BE APPROVED BY DELPHI PACKARD ELECTRIC SYSTEMS ENGINEERING.

MINIMUMS

ELECTRICAL CONDUCTIVITY - ≥ 28% IACS AT 20°C. USE OF A MATERIAL WITH CONDUCTIVITY < 28% IACS MUST BE APPROVED BY PACKARD ELECTRIC MATERIALS ENGINEERING.

TENSILE STRENGTH - 420 - 475 MPa

UNDERPLATING FOR TIN PLATING - FOR BASE MATERIALS CONTAINING 10% OR MORE ZINC, AN UNDERPLATE OF COPPER 0.0025 MM (100 µIN) MINIMUM THICK IS REQUIRED.

PROCESSING LUBRICANT - ANY PROCESSING LUBRICANT REMAINING ON TERMINALS MUST NOT VARNISH OR DEGRADE THE ELECTRICAL PERFORMANCE OF THE CONNECTION UP TO A MAXIMUM TEMPERATURE OF 150°C. PROCESSING LUBRICANTS MUST BE APPROVED BY DELPHI PACKARD ELECTRIC SYSTEMS ENGINEERING.

MATING BLADE INFORMATION

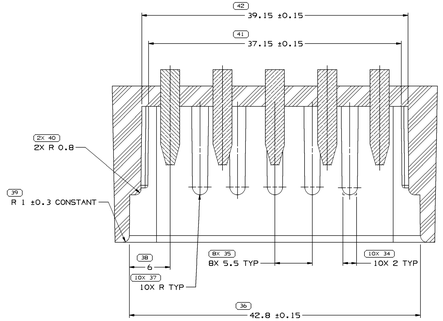

SECTION A-A

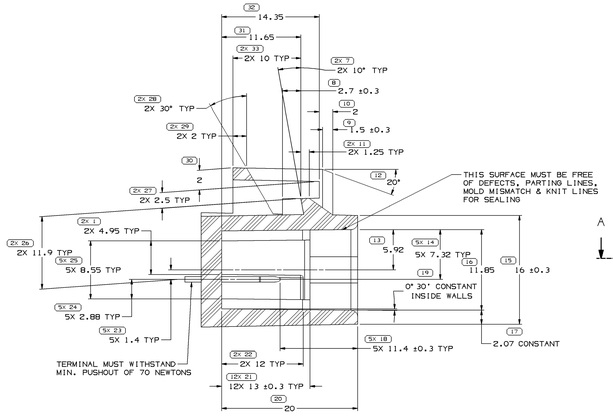

SECTION B-B

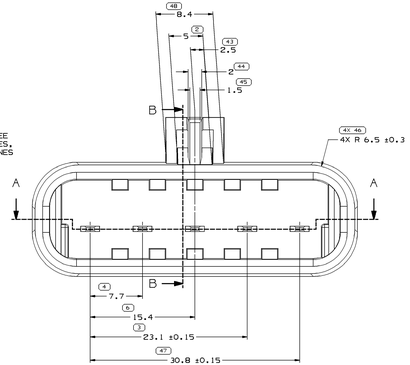

MATING DEVICE DETAIL

INSPECTION SYMBOLS SHOWN IN THESE VIEWS ARE FOR REFERENCE ONLY

OPERATING NUMBER						
12084898						
SIZE	SHEET	PAGE	NO. SHEET	REVISION	ORG	SKIP
A1x3	511	2 OF 1	1 OF 1	R	02	-

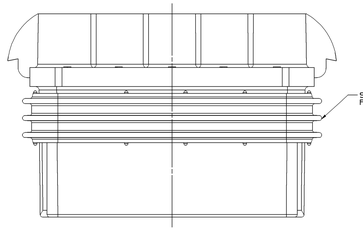

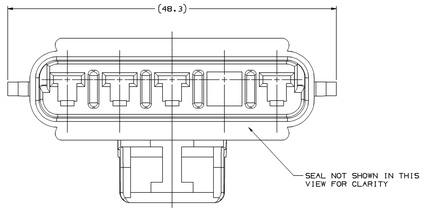

TYPE 101

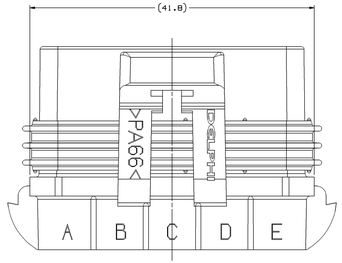

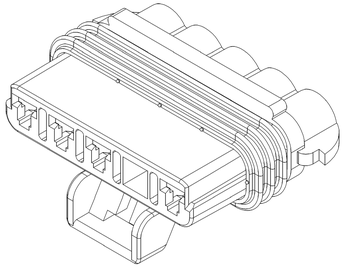

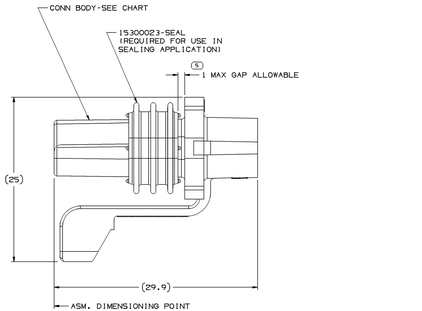

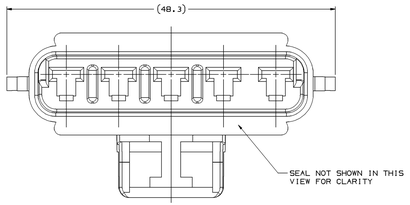

TYPE 102
SAME AS TYPE 101
EXCEPT AS SHOWN

NOTES

1. UNLESS OTHERWISE SPECIFIED AND/OR INDICATED:

   DIMENSIONS ARE TO FACE OF VIEW SHOWN AND AUTOMATICALLY ROUNDED BY COMPUTER FOR INSPECTION (SEE MATH MODEL FOR PRECISE DIMENSIONS). FOR ALL OTHER DIMENSIONS NOT SHOWN BUT REQUIRED FOR TOOL BUILD, SEE MATH MODEL FOR PRECISE TOOL PATH DATA.

2. REFERENCE MATING COMPONENTS OR EQUIVALENT:

   FISHER-GUIDE TAIL LAMP MODULE OR EQUIVALENT.

3. THIS PART ACCEPTS THE FOLLOWING COMPONENTS OR EQUIVALENT:

   USE FEMALE TERMINAL 12077412 OR EQUIVALENT.
   USE CABLE SEAL 12015323 OR EQUIVALENT.
   USE TERMINAL POSITION ASSURANCE 15324957 OR EQUIVALENT.
   USE CONNECTOR POSITION ASSURANCE 12020833 OR EQUIVALENT.

4. WHEN PARTS ARE SHIPPED, THEY MUST BE PACKED IN PLASTIC BAGS OR SHIPPING CONTAINERS MUST BE LINED WHITH PLASTIC LINERS. BAGS OR LINERS MUST BE SEALED TO AVOID ENTRY OF FOREIGN MATTER.

5. DESIGN WILL PASS SALT FOG AND IMMERSION TEST AFTER CONDITIONING AS SPECIFIED IN ESA-710 - WHEN MATED TO MATING PART OR EQUIVALENT

PART NO	REV	TYPE		CONN PART NO.	COLOR
12084891	A2	102		12084890	MED GRAY
12065862	A2	101	D	12065861	BLACK

SYMBOL DEFINITION		MISSING SYMBOLS
A DIMENSION WITHOUT AN INSPECTION REPORT SYMBOL ☐ DOES NOT REQUIRE INSPECTION. IT MAY BE CONTROLLED ON THE INDIVIDUAL COMPONENT DRAWING.	TOTAL NO OF INSPECTIONS REQUIRED 117	NO MISSING SYMBOL NUMBER
	LAST NO. USED 48	

ORG STATUS					ZONE	REVISION HISTORY	AUTH	DR	APVD	APVD 2
DATE	STA	REV	APP	SKP						
09AU06	R	01	-	-		CLEARED REV COL. ALL PARTS - REDRAWN TO PDL UPDATED MATING BLADE INFO. REMOVED TERMINAL 12065863, ADDED TPA 15324957 & CPA 12020833 TO NOTE 3, REMOVED ESA 644, ESA 650 & C-4006 FROM SEALING NOTE 5	281204	EFS	TRG	WTM
25OC06	R	02	-	-		ALL PARTS - REVISED CONNECTORS 12084890 AND 12065861	285825	WM	WM	WTM

DWG TYPE	PART DRAWING
STYLE	
VOLUME (CM³)	SIZEW USE D

UNLESS OTHERWISE SPECIFIED

THIS DRAWING IS IN ACCORDANCE WITH ASME Y14.100-1994 AS MODIFIED BY THE DELPHI SUPPLEMENTS.
THIS DRAWING IS THE PROPERTY OF DELPHI AND IS LOANED FOR REFERENCE ONLY. NO RIGHTS ARE GRANTED TO REPRODUCE OR DISTRIBUTE ANY OF THE INFORMATION CONTAINED HEREIN WITHOUT WRITTEN PERMISSION.

ALL DIMENSIONS ARE IN MILLIMETERS

REFERENCE

N/A PROCESS SENSITIVE DIMENSION

DIMENSIONS ENCLOSED IN ( ) INDICATE REFERENCE DIMENSIONS, SEE AS TOLERANCE LIMITS ARE ESTABLISHED

| ACCUMULATIVE ANGLE (DEG) | | | | | |